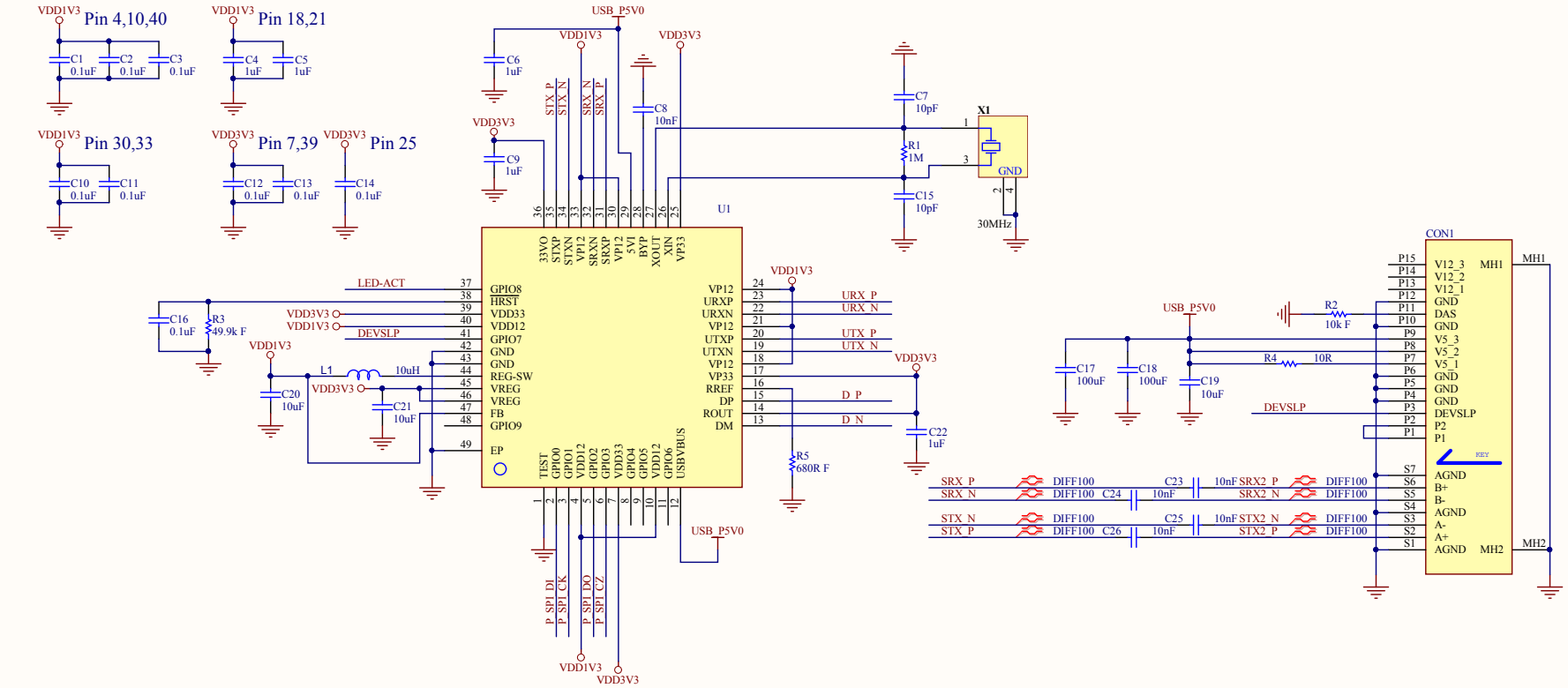

Mounting Holes

MH1 MOUNTING HOLE 3MM

MH2 MOUNTING HOLE 3MM

MH3 MOUNTING HOLE 3MM

MH4 MOUNTING HOLE 3MM

Title	*CloudShell For XU4*		*Hardkernel Co.,LTD.* *704 K-center 248-25 Simindae* *Dongan Anyang* *Gyeonggido* *South Korea*
Size: A3	Number: 1	Revision: 0.1	
Date: 2015-06-29	Time: 오후 5:12:17	Sheet 1 of 1	
File: cloudshell.SchDoc			Designed by: ruppi kim@hardkernel.com